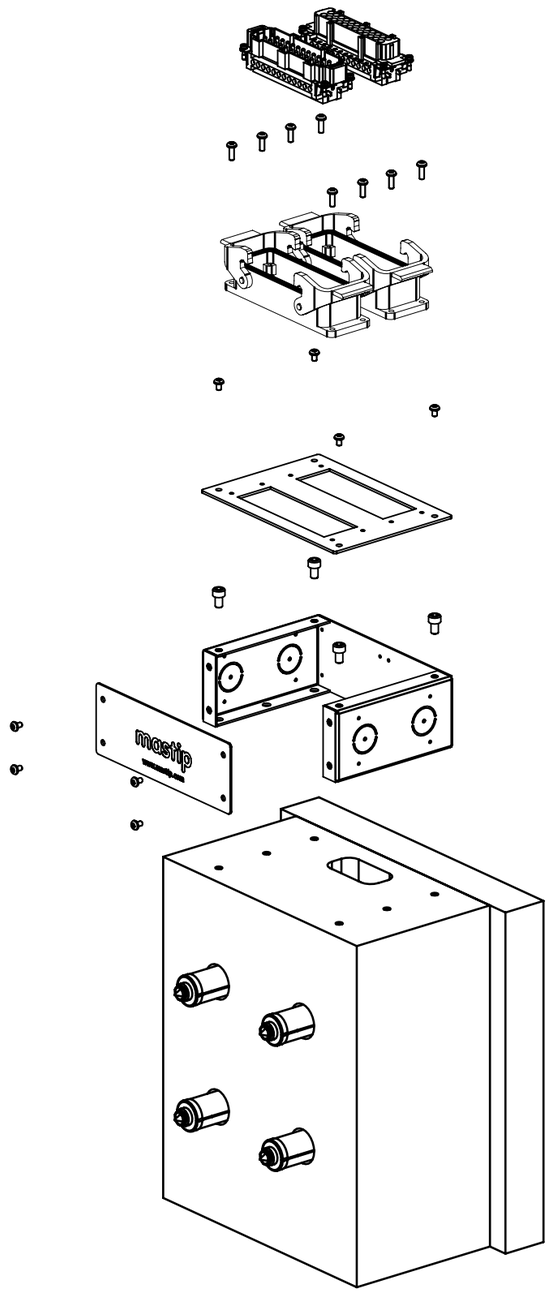

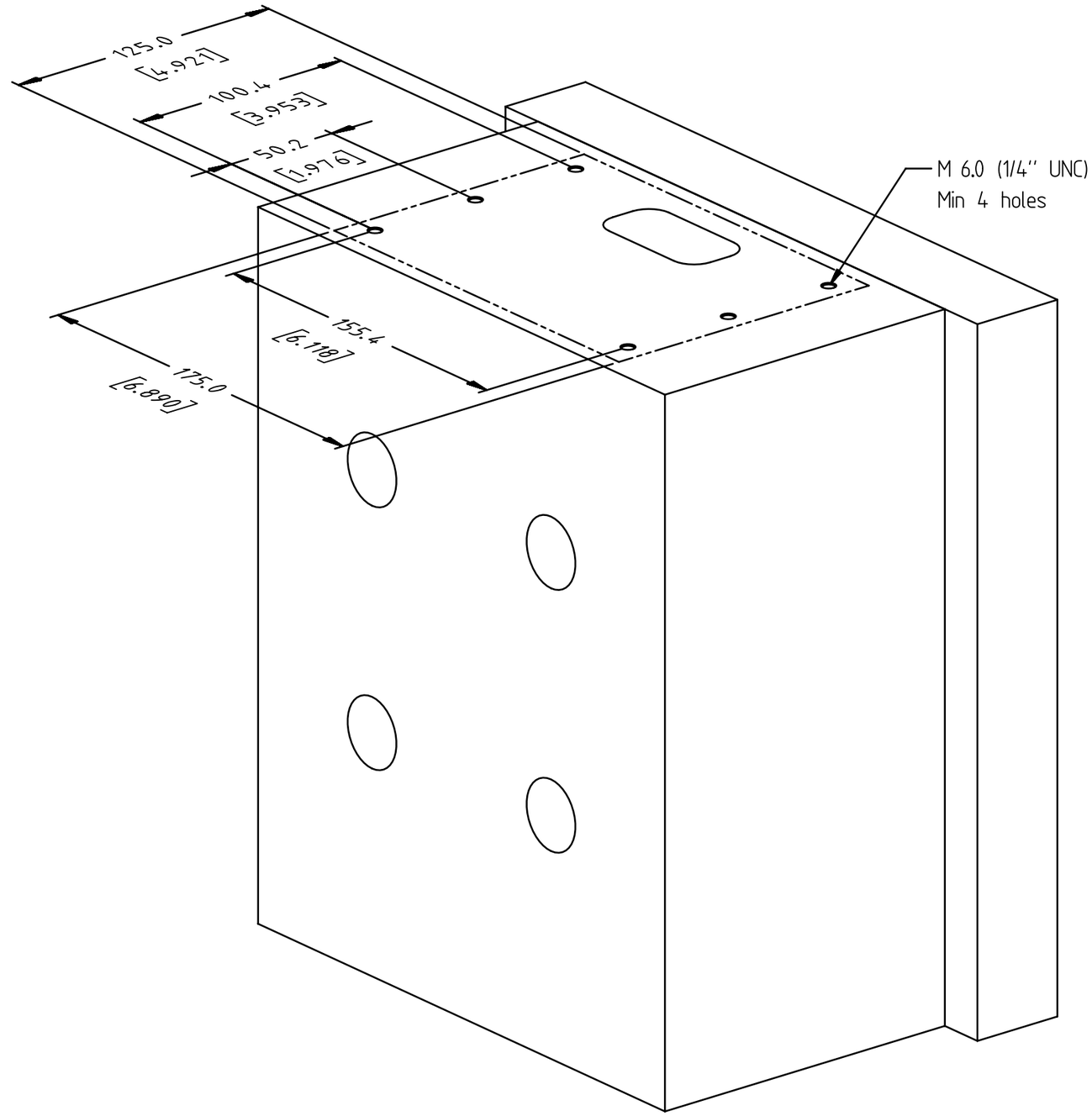

ISSUE	DATE	DESCRIPTION	INIT

ISSUE DETAILS

mastip™ hot runner solutions

www.mastip.com

DESCRIPTION

TOLERANCES
0 ± 0.5
0.0 ± 0.1
0.00 ± 0.02
0.000 ± 0.005

ASSEMBLY DETAILS

TERMINAL MOUNTING BOX 2 ROW

REF		MASTIP REF		DRAWING NUMBER	SHEET 2 of 2 / ISSUE
MATERIAL		APP			
SCALE	1:1	CHECKED		Third Angle	CLIENT: Mastip
UNITS	MILLIMETERS (MM)	DESIGNER			
DETAILS	NX10	DATE	1/07/2019	Sheet Size A3	

THIS DOCUMENT REMAINS THE EXCLUSIVE PROPERTY OF THE MASTIP TECHNOLOGY LTD. COMPANY

REPRODUCTION OR ANY USE NOT IN CONFORMITY WITH THE INTENDED APPLICATION IS NOT PERMISSABLE

COPYRIGHT MASTIP TECHNOLOGY LTD. NEW ZEALAND